Fire damper with air valve

FDA-BU-KN / FDA-BU-KW

Dimensions

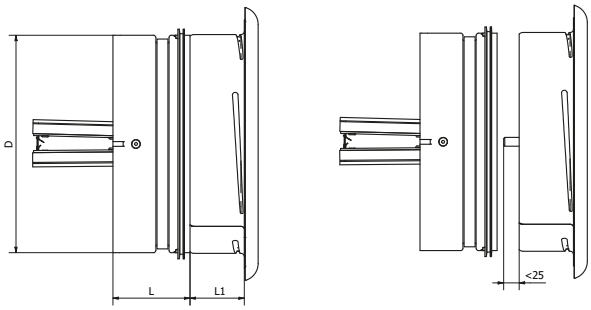

Product code	D [mm]	L [mm]	L_1 [mm]	Weight [kg]	Effective area A_{eff} [m²]
FDA-BU-KN-100 FDA-KU-KW-100	100	70	50	0.33	0.0027
FDA-BU-KN-125 FDA-BU-KW-125	125	70	50	0.44	0.0056
FDA-BU-KN-160 FDA-BU-KW-160	160	70	50	0.64	0.0113
FDA-BU-KN-200 FDA-BU-KW-200	200	70	50	0.90	0.0202

Description

Shut-off fire dampers FDA-BU-KW and FDA-BU-KN series, used in general ventilation systems as protection against penetration of smoke and fire between separated adjacent fire zones. The fire damper is available in Ø 100, 125, 160, and 200 mm. The shut-off fire dampers can be used for passage of ventilation systems through vertical and horizontal building partitions, providing fire tightness class E, fire insulation class I, smoke tightness class S of:

- FDA-BU-KW EI 120 (ve ho i↔o) S (300 Pa)
- FDA-BU-KN EI 120 (ve ho i↔o) S (300 Pa)

The damper is closed automatically as a result of temperature increase to of about 72°C by breaking the fusible release. The released partition closes immediately. The fire dampers can be fitted with one or two limit switches to indicate the closed position of one or two damper blades.

Available versions:

FDA-BU-KW - aaa - bbb - ccc

aaa - nominal size: 100, 125, 160, 200

bbb - fire resistance: EIS120, EIS60

ccc - optional accessories:

- no limit switches (standard)
- Z1 - one limit switch (closed position)
- Z2 - two limit switches (closed position)

Product code example

Product code: **FDA-BU - KW - 200 - 120 - Z1**

Fire damper
Air valve
Nominal size
EIS fire resistance rating
Optional accessories

Design

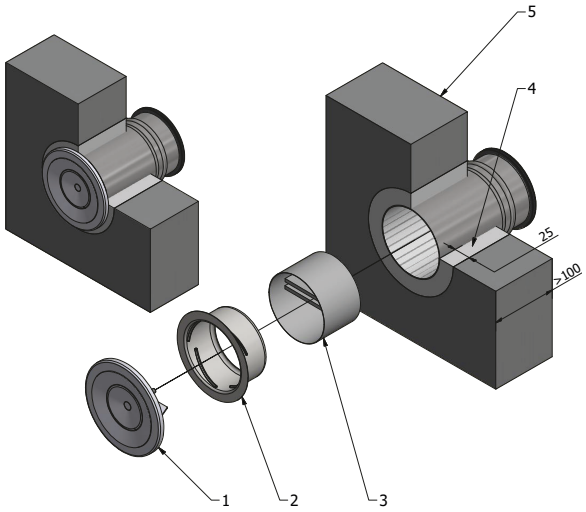

1. Air supply or air exhaust valve
2. Mounting frame
3. FDA-BU fire damper in RML casing
4. Seal: concrete or gypsum mortar
5. Fire partition

ALNOR® ventilation systems
is a legally protected trademark and technical patent. All rights reserved.

Fire damper with air valve

FDA-BU-KN / FDA-BU-KW

Tests and certificates

- Fire resistance rating: EIS 120, EIS 60,
- Test method as per EN 1366-2:2015, classification method as per EN 13501-3+A1:2010P,
- Corrosion resistance as per EN 15650,
- EC declaration of conformity (EN 15650).

Installation

The round fire dampers are designed for installation in general ventilation systems. When integrated into fire partitions, they provide equivalent protective performance and features as the partitions. The fire damper blade remains open under normal operating conditions – it is closed automatically in the event of a fire.

The fire dampers can be installed in the following partitions:

Type of partition	*Minimum partition thickness [mm]*
Concrete floor	150
Concrete wall	130
Solid brick wall	130
Cellular concrere block wall	130
Plasterboard wall on steel framing	130

It is allowed to install the dampers in a partition in any position of the axis of rotation from 0° to 360.

See the technical documentation shut-off fire damper FDA-BU for all information about wing-blade fire dampers and related installation options.

Technical data

Pressure drops fpr air density ρ=1.21 kg/m³

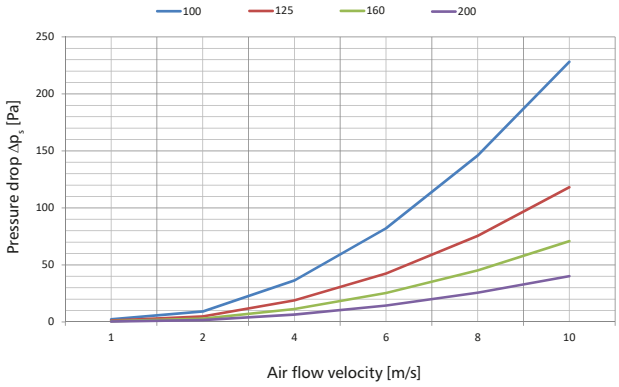

Local loss factor ζ

Diameter ØD [mm]	*Local loss factor ζ*
Ø100	3.773
Ø125	1.954
Ø160	1.171
Ø200	0.664

ALNOR® ventilation systems
is a legally protected trademark and technical patent. All rights reserved.

Fire damper with air valve

FDA-BU-KN / FDA-BU-KW

Specification of hydraulic parameters depending on the position of the FDA-BU damper

Diagram FDA-BU-KW-125 - exhaust

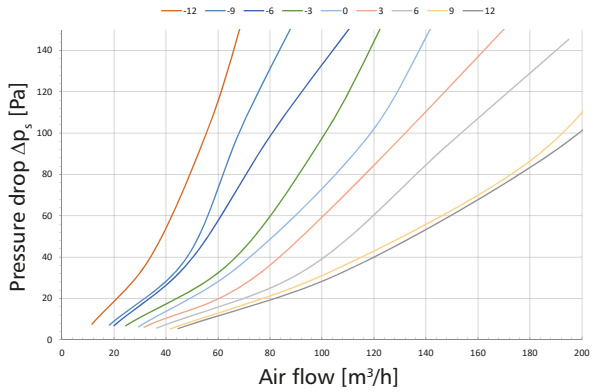

Diagram FDA-BU-KN-125 - supply

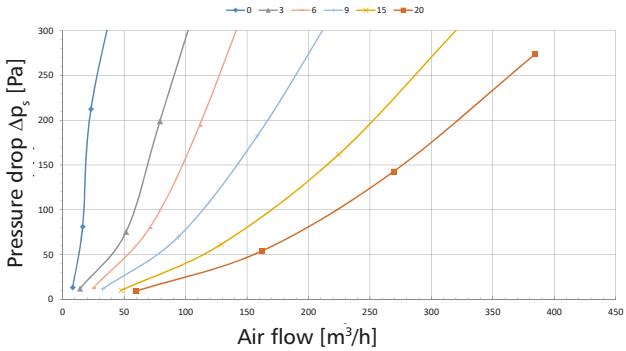

Diagram FDA-BU-KW-160 - exhaust

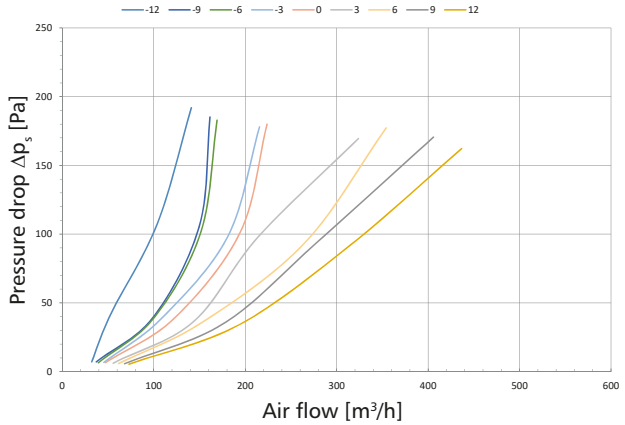

Diagram FDA-BU-KN-160 - supply

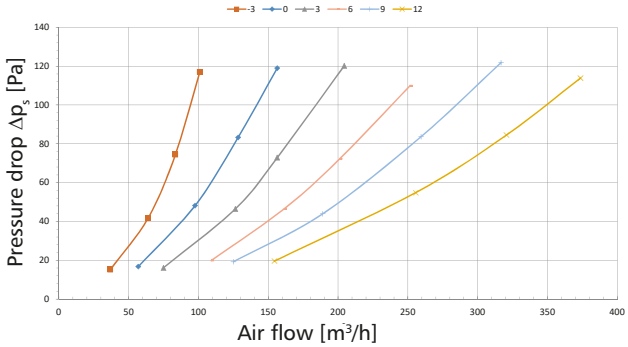

Diagram FDA-BU-KW-200 - exhaust

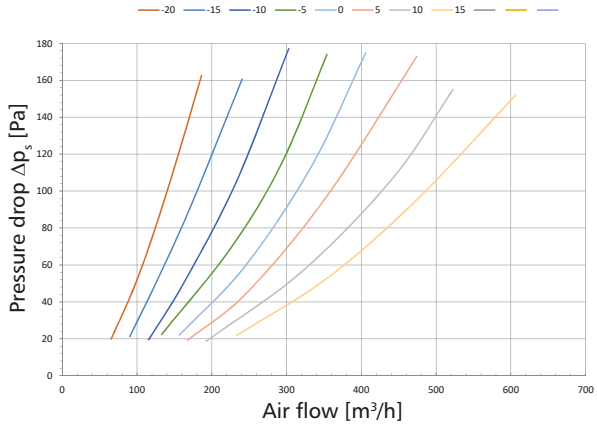

Diagram FDA-BU-KN-200 - supply

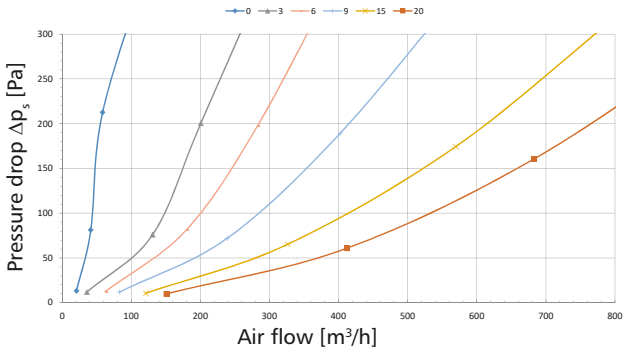

ALNOR® ventilation systems
is a legally protected trademark and technical patent. All rights reserved.